Landalucía, 7 - P.I. Júndiz 01015 Vitoria / Spain
+34 945 290 010
azolgas@azolgas.com
www.azolgas.com

AZOL GAS

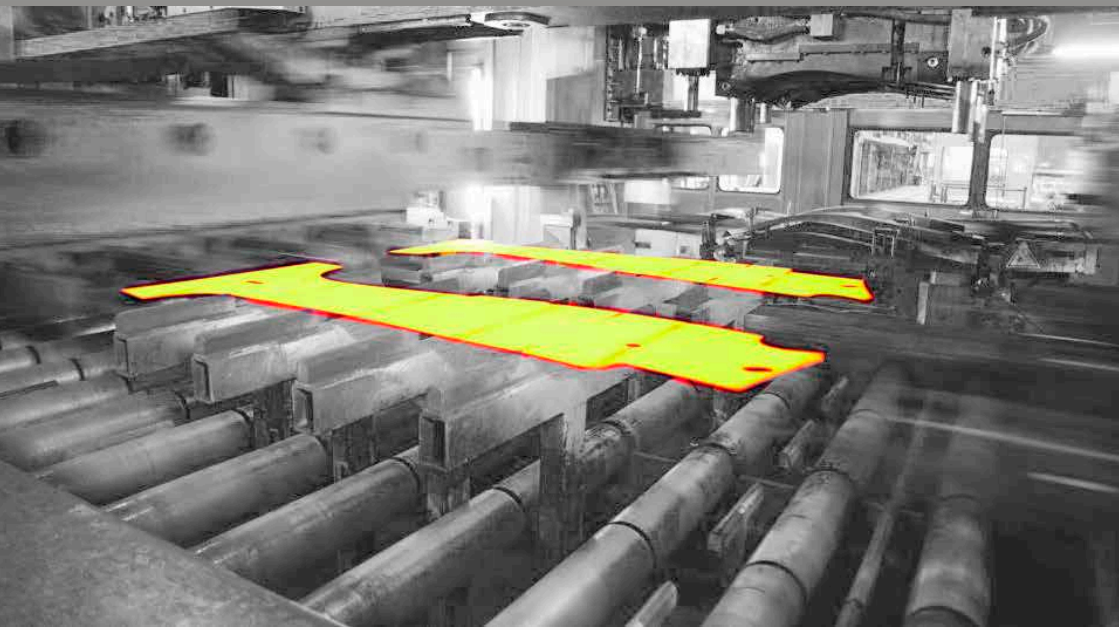

HYDRAULIC BLOCK CYLINDERS

- High force and small size
- Double-acting function
- Tolerate heavy loads

© Azolgas 2021

AZOL GAS

DESCRIPTION

Hydraulic block cylinders are widely used on industrial applications where a high force and small dimensions are required.

HBR hydraulic block cylinders tolerate heavy loads on metal stamping and mould injection applications such as punching, bending, deburring.

Featured with double-acting function, HBR cylinders guarantee safety, high performance and repeatable functionality.

HBR cylinders are equipped with wipers to reduce the effects of harsh working environment.

Piston rod guide rings minimize the impact of side loads and ensure longer life performance.

MAIN FEATURES

Type:	Hydraulic Block Cylinders (HBRS Standard / HBRR Reinforced)
Function:	Double acting
Max. Operating pressure:	500 bar
Fixing holes:	4x longitudinal fixing holes + 2x cross fixing holes

TECHNICAL CHARACTERISTICS

Piston rod material:
- Casehardening Steel

Cylinder body material:
- High-alloy Steel

Seals material:
- NBR/PU (-30ºC + 100ºC with HLP)

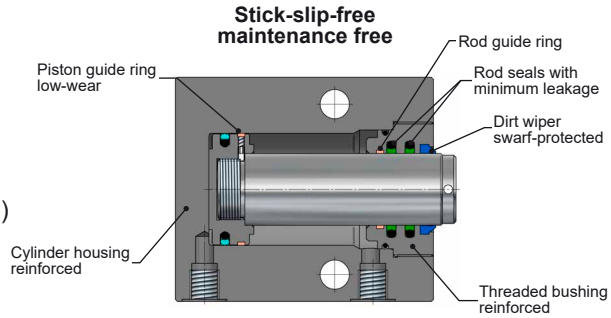

OPERATING INSTRUCTIONS

On HBR hydraulic block cylinders use only the specified hydraulic oil.

If cylinders are fixed by screws across the cylinder axis, support is required when (p > 160 bar pushing force and p > 250 bar pulling force).

In punching operations, due to heavy side loads, it is necessary to reduce the maximum operating pressure up to 250 bar.

Strokes can be limited by using distance washers.

Safety warnings:
- High forces from hydraulic cylinders must be absorbed by the tool
- Tool manufacturer must prevent potential risk of injuries by providing effective protection devices

© Azolgas 2021

HBRS 50-32 050 STANDARD VERSION

Hydraulic Cylinder

AZOL GAS

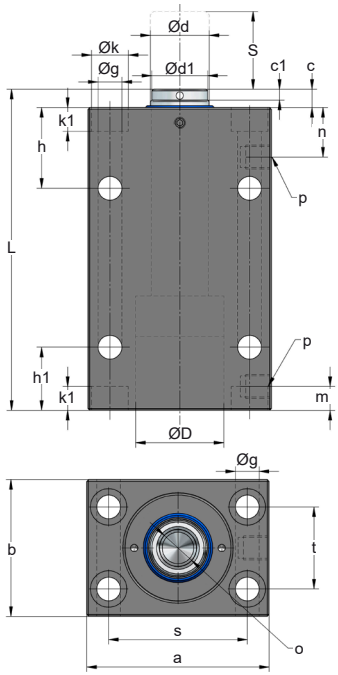

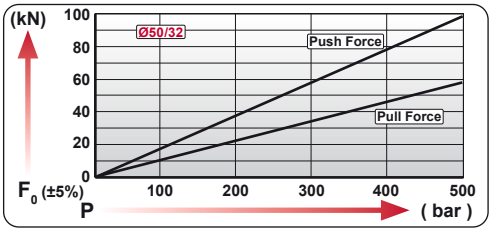

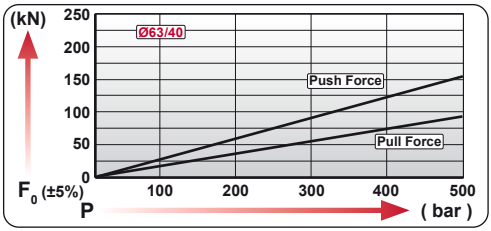

Force to push and to pull

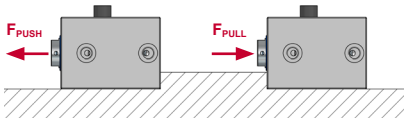

Support required if

P > 160 bar P > 250 bar

ORDER	ØD	Ød	S	L	a	b	c	Ød1xc1	Øg	h	h1	Øk	k1	n	m	o	p	s	t
HBRS 50-32 050	50	32	50	125	100	75	10	30,5x6	13	44	-	20	13	27	13	M20x35	G1/4”	76	45
HBRS 50-32 100	50	32	100	175	100	75	10	30,5x6	13	44	-	20	13	27	13	M20x35	G1/4”	76	45
HBRS 50-32 160	50	32	160	238	100	75	10	30,5x6	13	44	30	20	13	27	13	M20x35	G1/4”	76	45
HBRS 63-40 100	63	40	100	186	125	95	14	38,7x9	17	50	-	26	17	26	17	M27x39	G1/2”	95	65

ORDER	ØD	Ød	S	Push Force (100 bar) [kN]	Push Force (500 bar) [kN]	Pull Force (100 bar) [kN]	Pull Force (500 bar) [kN]	Oil Vol. to extend [cm³]	Oil Vol. to retract [cm³]	Kg.
HBRS 50-32 050	50	32	50	19,5	98,5	11,6	57,9	98,15	58	5,40
HBRS 50-32 100	50	32	100	19,5	98,5	11,6	57,9	196,30	116	7,68
HBRS 50-32 160	50	32	160	19,5	98,5	11,6	57,9	314,08	185,6	10,46
HBRS 63-40 100	63	40	100	31,2	156,0	18,6	93,0	311,70	186	12,45

MOUNTING OPTIONS

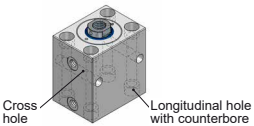

Broad Side

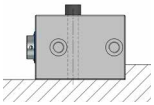

Rod Side

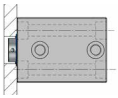

Bottom Side

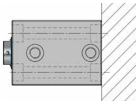

TECHNICAL DATA

Fluid	Hydraulic OIL HLP 46	Pmax	500 bar *7252 psi*	
Vmax	0,5 m/s	Tmin Tmax	0 ºC *32 ºF*	100 ºC *212 ºF*

HOW TO ORDER

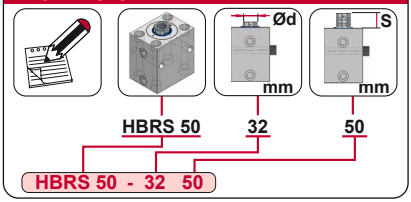

© Azolgas 2021

AZOL GAS

REINFORCED VERSION HBRR 50-32 050

Hydraulic Cylinder

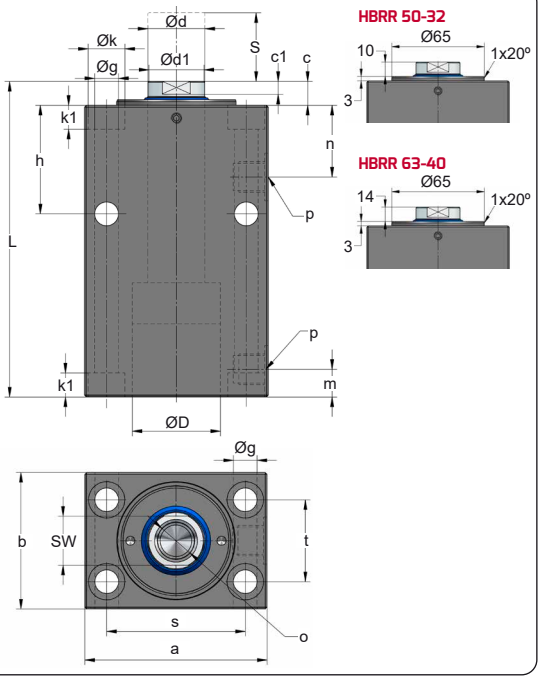

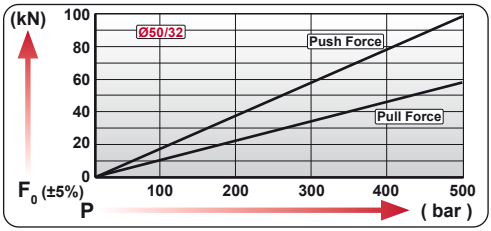

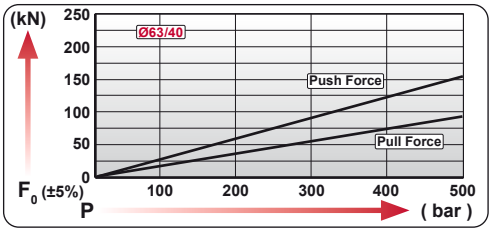

Force to push and to pull

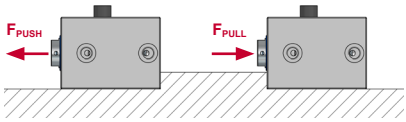

Support required if

P > 160 bar P > 250 bar

ORDER	ØD	Ød	S	L	a	b	c	Ød1xc1	Øg	h	Øk	k1	n	m	o	p	s	t	SW
HBRR 50-32 050	50	32	50	152	100	75	10	31x8,2	13	62	20	13	42	15	M20x35	G3/8"	76	45	27
HBRR 50-32 100	50	32	100	202	100	75	10	31x8,2	13	62	20	13	42	15	M20x35	G3/8"	76	45	27
HBRR 50-32 160	50	32	160	262	100	75	10	31x8,2	13	62	20	13	42	15	M20x35	G3/8"	76	45	27
HBRR 63-40 100	63	40	100	220	125	95	14	38,7x10,2	17	75	26	17	51	18	M27x39	G1/2"	95	65	36

ORDER	ØD	Ød	S	Push Force (100 bar) [kN]	Push Force (500 bar) [kN]	Pull Force (100 bar) [kN]	Pull Force (500 bar) [kN]	Oil Vol. to extend [cm³]	Oil Vol. to retract [cm³]	Kg.
HBRR 50-32 050	50	32	50	19,5	98,5	11,6	57,9	98,15	58	6,73
HBRR 50-32 100	50	32	100	19,5	98,5	11,6	57,9	196,30	116	9,00
HBRR 50-32 160	50	32	160	19,5	98,5	11,6	57,9	314,08	185,6	11,74
HBRR 63-40 100	63	40	100	31,2	156,0	18,6	93,0	311,70	186	15,12

MOUNTING OPTIONS

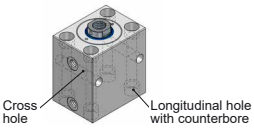

Broad Side

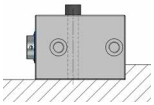

Rod Side

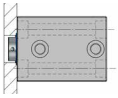

Bottom Side

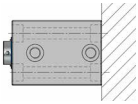

TECHNICAL DATA

Fluid	Hydraulic OIL HLP 46	Pmax	500 bar *7252 psi*	
Vmax	0,5 m/s	Tmin Tmax	0 ºC *32 ºF*	100 ºC *212 ºF*

HOW TO ORDER

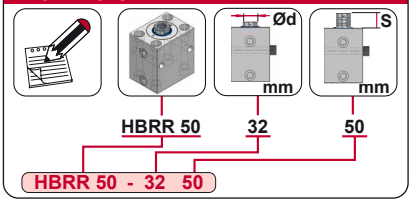

© Azolgas 2021

AZOL GAS

Landalucía, 7, P.I. Júndiz
01015 Vitoria-Gasteiz
Tel.: +34 945 290 010
Fax: +34 945 290 381

azolgas@azolgas.com
www.azolgas.com

Edition 01/2022