Landalucía, 7 - P.I. Júndiz 01015 Vitoria / Spain | +34 945 290 010 | azolgas@azolgas.com | www.azolgas.com

GAS SPRINGS

AZOL GAS

SPECIAL APPLICATIONS

No matter if standard solutions does not fit your needs,
we supply customized multi-technology for your applications

- Counter balance gas springs
- Hollow rod gas springs
- Traction gas springs

Contact us to define best solution to your requirements

AZOL GAS

SPECIAL APPLICATIONS

ROB / ROT

Counter Balance Gas Springs

VH

Hollow Rod Gas Springs

ART

Traction Gas Springs

© Azolgas 2022

ROB 750

Special Applications

AZOL GAS

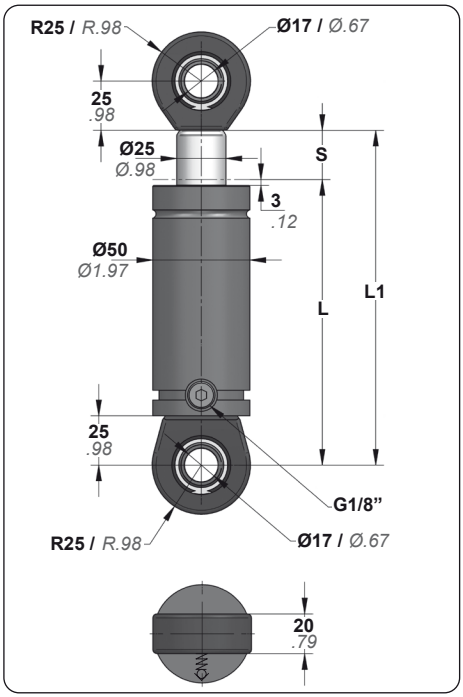

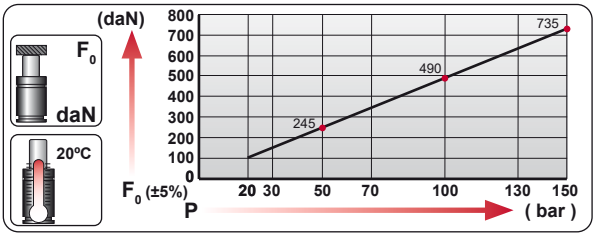

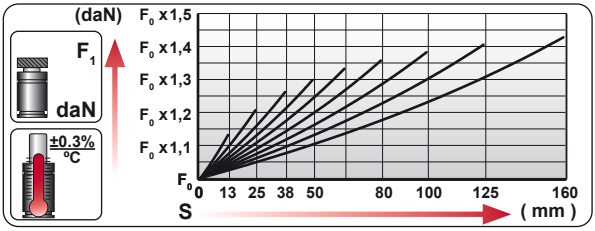

VDI SAFETY

STANDARDS

ORDER	S		L1 ±0.25		L		F_0 Initial Force		F_1 (ISOTHERMAL) End Force		Vol.			
	mm	inch	mm	inch	mm	inch	daN	lb	daN	lb	cm³	in³	Kg.	lb
ROB 750 013	13	0.51	146	5.75	133	5.24	740	1664	842	1892	53	3.2	1.65	3.64
ROB 750 025	25	0.98	170	6.69	145	5.71			897	2017	70	4.3	1.75	3.86
ROB 750 038	38	1.50	196	7.72	158	6.22	±5%		938	2108	88	5.4	1.85	4.08
ROB 750 050	50	1.97	220	8.66	170	6.69	150 bar		965	2169	105	6.4	1.95	4.30
ROB 750 063	63.5	2.50	247	9.72	183.5	7.22	2175 psi		987	2220	124	7.6	2.06	4.54
ROB 750 080	80	3.15	280	11.02	200	7.87	at		1008	2266	148	9.0	2.20	4.85
ROB 750 100	100	3.94	320	12.60	220	8.66	20ºC		1027	2308	176	10.7	2.36	5.20
ROB 750 125	125	4.92	370	14.57	245	9.65	68ºF		1043	2345	211	12.9	2.57	5.67
ROB 750 160	160	6.30	440	17.32	280	11.02			1059	2382	260	15.9	2.85	6.28

TECHNICAL DATA

Fluid	N_2	Pmin Pmax 20ºC / 68ºF	20 bar 290 psi	150 bar 2175 psi	Charging Adapter	18 CG 1-Q
Smax	< 90%	Tmin Tmax	0 ºC 32 ºF	80 ºC 176 ºF	Connection	ROB-H 750 XXX
Vmax	1,6 m/s	Force variation by temperature	±0,3% / ºC		Cartridge Kit	2540T340A

© Azolgas 2022

AZOL GAS

ROT 750

Special Applications

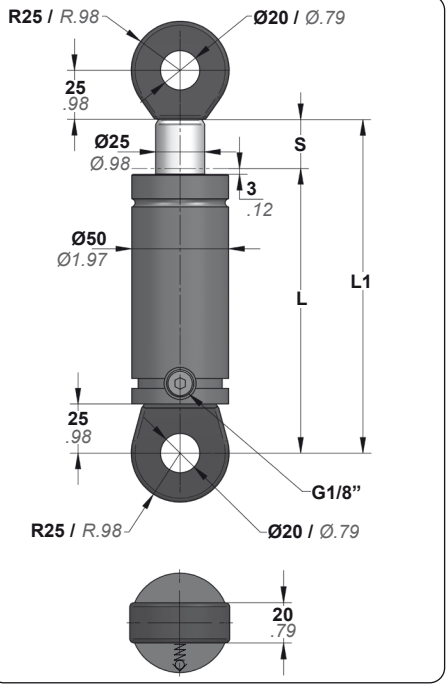

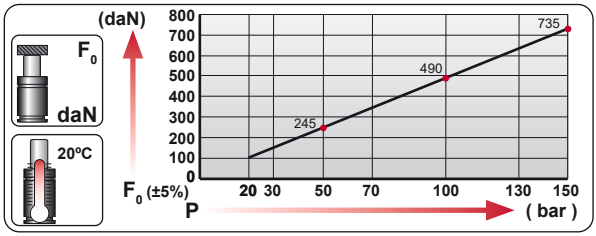

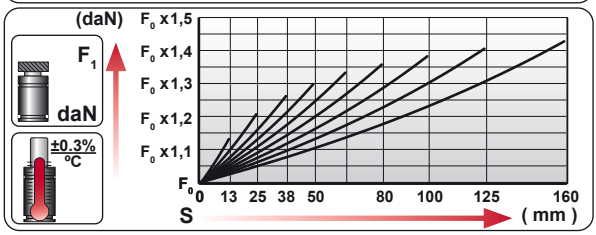

VDI SAFETY > Vmax | Flex Rod

STANDARDS PED

ORDER	S		L1 ±0.25		L		F_0 Initial Force		F_1 (ISOTHERMAL) End Force		Vol.			
	mm	inch	mm	inch	mm	inch	daN	lb	daN	lb	cm³	in³	Kg.	lb
ROT 750 013	13	0.51	146	5.75	133	5.24	740	1664	842	1892	53	3.2	1.69	3.73
ROT 750 025	25	0.98	170	6.69	145	5.71			897	2017	70	4.3	1.79	3.95
ROT 750 038	38	1.50	196	7.72	158	6.22	±5%		938	2108	88	5.4	1.89	4.17
ROT 750 050	50	1.97	220	8.66	170	6.69	150 bar		965	2169	105	6.4	1.99	4.39
ROT 750 063	63.5	2.50	247	9.72	183.5	7.22	2175 psi		987	2220	124	7.6	2.10	4.63
ROT 750 080	80	3.15	280	11.02	200	7.87	at		1008	2266	148	9.0	2.24	4.94
ROT 750 100	100	3.94	320	12.60	220	8.66	20ºC		1027	2308	176	10.7	2.40	5.29
ROT 750 125	125	4.92	370	14.57	245	9.65	68ºF		1043	2345	211	12.9	2.61	5.75
ROT 750 160	160	6.30	440	17.32	280	11.02			1059	2382	260	15.9	2.89	6.37

TECHNICAL DATA

Fluid	N_2	Pmin Pmax 20ºC / 68ºF	20 bar 290 psi	150 bar 2175 psi	Charging Adapter	18 CG 1-Q
Smax	< 90%	Tmin Tmax	0 ºC 32 ºF	80 ºC 176 ºF	Connection	ROT-H 750 XXX
Vmax	1,6 m/s	Force variation by temperature	±0,3% / ºC		Cartridge Kit	2540T340A

© Azolgas 2022

ROB 1500

Special Applications

AZOL GAS

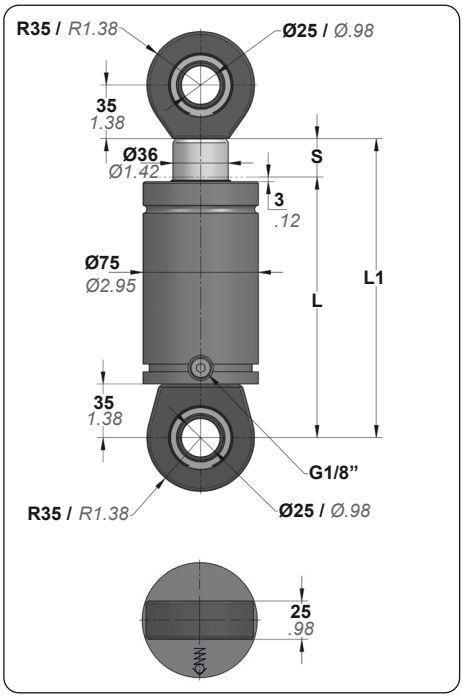

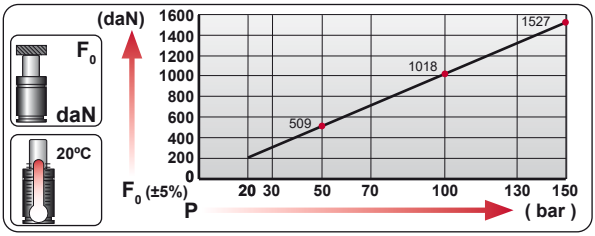

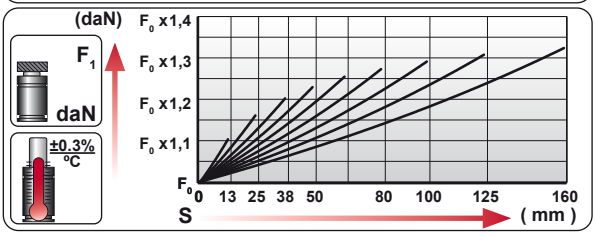

VDI SAFETY > Vmax | Flex Rod

STANDARDS PED

ORDER	S		L1 ±0.25		L		F_0 Initial Force		F_1 (ISOTHERMAL) End Force		Vol.			
	mm	inch	mm	inch	mm	inch	daN	lb	daN	lb	cm³	in³	Kg.	lb
ROB 1500 013	13	0.51	171	6.73	158	6.22	1530	3440	1704	3830	130	7.9	4.18	9.22
ROB 1500 025	25	0.98	195	7.68	170	6.69			1793	4030	174	10.6	4.36	9.61
ROB 1500 038	38	1.50	221	8.70	183	7.20			1856	4173	220	13.4	4.55	10.03
ROB 1500 050	50	1.97	245	9.65	195	7.68			1897	4265	263	16.0	4.72	10.41
ROB 1500 063	63.5	2.50	272	10.71	208.5	8.21			1931	4342	311	19.0	4.92	10.85
ROB 1500 080	80	3.15	305	12.01	225	8.86			1962	4410	370	22.6	5.16	11.38
ROB 1500 100	100	3.94	345	13.58	245	9.65			1989	4470	441	26.9	5.46	12.04
ROB 1500 125	125	4.92	395	15.55	270	10.63			2013	4524	531	32.4	5.82	12.83
ROB 1500 160	160	6.30	465	18.31	305	12.01			2036	4576	656	40.0	6.33	13.96

±5% 150 bar 2175 psi at 20ºC 68ºF

TECHNICAL DATA

Fluid	N_2	Pmin Pmax 20ºC / 68ºF	20 bar 290 psi / 150 bar 2175 psi	Charging Adapter	18 CG 1-Q
Smax	< 90%	Tmin Tmax	0 ºC 32 ºF / 80 ºC 176 ºF	Connection	ROB-H 1500 XXX
Vmax	1,6 m/s	Force variation by temperature	±0,3% / ºC	Cartridge Kit	3663R440A

© Azolgas 2022

AZOL GAS

ROT 1500

Special Applications

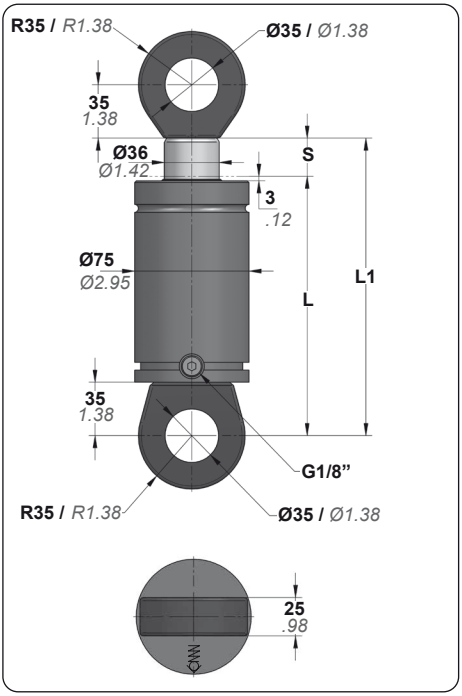

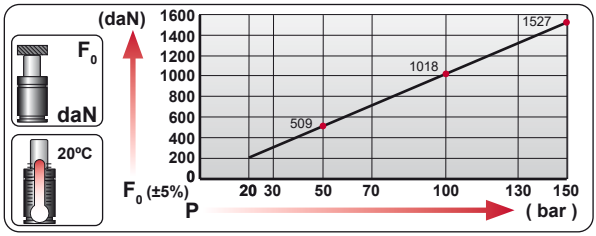

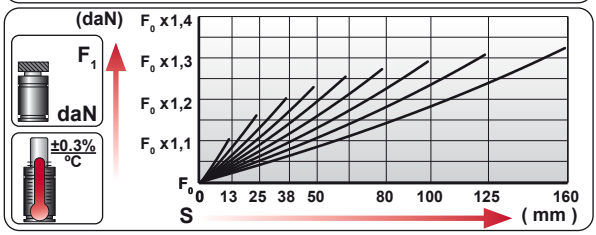

VDI SAFETY > Vmax | Flex Rod

STANDARDS PED

ORDER	S		L1 ±0.25		L		F_0 Initial Force		F_1 (ISOTHERMAL) End Force		Vol.			
	mm	inch	mm	inch	mm	inch	daN	lb	daN	lb	cm³	in³	Kg.	lb
ROT 1500 013	13	0.51	171	6.73	158	6.22	1530	3440	1704	3831	130	7.9	4.12	9.08
ROT 1500 025	25	0.98	195	7.68	170	6.69			1793	4031	174	10.6	4.29	9.46
ROT 1500 038	38	1.50	221	8.70	183	7.20			1856	4172	220	13.4	4.48	9.88
ROT 1500 050	50	1.97	245	9.65	195	7.68			1897	4265	263	16.0	4.66	10.27
ROT 1500 063	63.5	2.50	272	10.71	208.5	8.21			1931	4341	311	19.0	4.86	10.71
ROT 1500 080	80	3.15	305	12.01	225	8.86			1962	4411	370	22.6	5.10	11.24
ROT 1500 100	100	3.94	345	13.58	245	9.65			1989	4471	441	26.9	5.39	11.88
ROT 1500 125	125	4.92	395	15.55	270	10.63			2013	4525	531	32.4	5.76	12.70
ROT 1500 160	160	6.30	465	18.31	305	12.01			2036	4577	656	40.0	6.27	13.82

±5%
150 bar
2175 psi
at
20ºC
68ºF

TECHNICAL DATA

Fluid	N_2	Pmin Pmax 20ºC / 68ºF	20 bar 150 bar 290 psi 2175 psi	Charging Adapter	18 CG 1-Q
Smax	< 90%	Tmin Tmax	0 ºC 80 ºC 32 ºF 176 ºF	Connection	ROT-H 1500 XXX
Vmax	1,6 m/s	Force variation by temperature	±0,3% / ºC	Cartridge Kit	3663R440A

© Azolgas 2022

ROB 3000

Special Applications

AZOL GAS

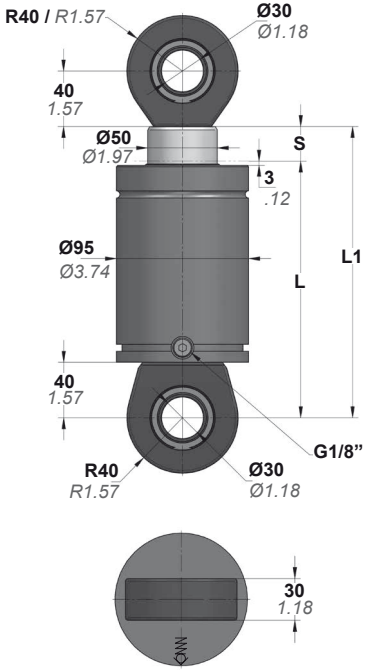

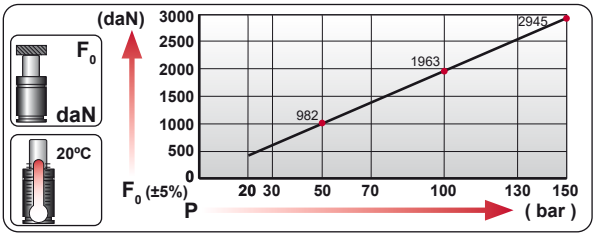

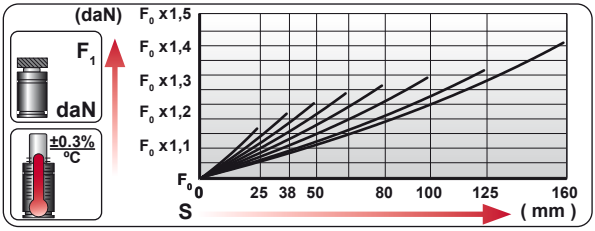

VDI SAFETY > Vmax | Flex Rod

STANDARDS PED

ORDER	S		L1 ±0.25		L		F_0 Initial Force		F_1 (ISOTHERMAL) End Force		Vol.			
	mm	inch	mm	inch	mm	inch	daN	lb	daN	lb	cm³	in³	Kg.	lb
ROB 3000 025	25	0.98	210	8.27	185	7.28	2945	6621	3481	7825	319	19.5	7.31	16.12
ROB 3000 038	38	1.50	236	9.29	198	7.80	±5% 150 bar 2175 psi at 20ºC 68ºF		3634	8170	394	24.0	7.65	16.87
ROB 3000 050	50	1.97	260	10.24	210	8.27			3739	8406	462	28.2	7.96	17.55
ROB 3000 063	63.5	2.50	287	11.30	223.5	8.80			3830	8610	540	32.9	8.31	18.32
ROB 3000 080	80	3.15	320	12.60	240	9.45			3914	8800	634	38.7	8.74	19.27
ROB 3000 100	100	3.94	360	14.17	260	10.24			3991	8973	749	45.7	9.26	20.41
ROB 3000 125	125	4.92	410	16.14	285	11.22			4062	9133	892	54.5	9.92	21.87
ROB 3000 160	160	6.30	480	18.90	320	12.60			4306	9680	994	60.7	10.83	23.88

TECHNICAL DATA

Fluid	N_2	Pmin Pmax 20ºC / 68ºF	20 bar 290 psi / 150 bar 2175 psi	Charging Adapter	18 CG 1-Q
Smax	< 90%	Tmin Tmax	0 ºC 32 ºF / 80 ºC 176 ºF	Connection	ROB-H 3000 XXX
Vmax	1,6 m/s	Force variation by temperature	±0,3% / ºC	Cartridge Kit	S ≤ 125mm 5080U460A S ≥ 160mm 5080U710A

© Azolgas 2022

AZOL GAS

ROT 3000

Special Applications

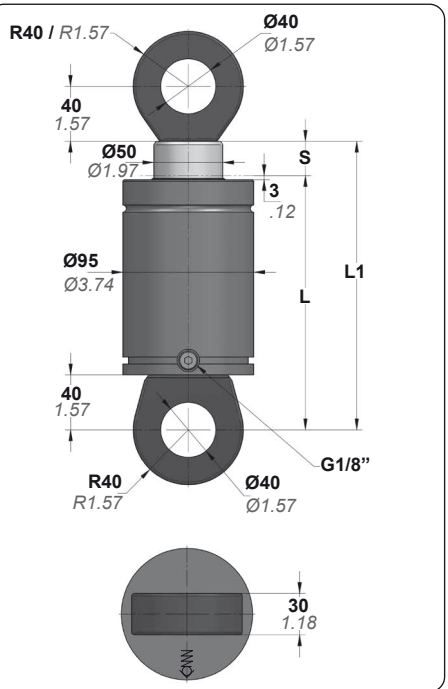

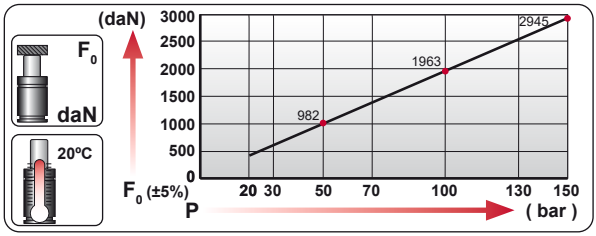

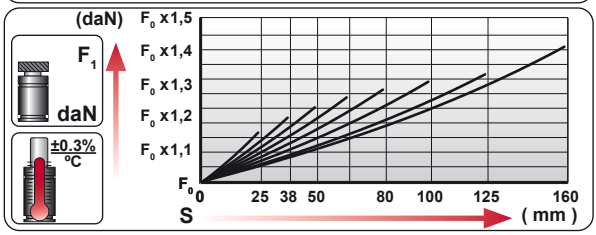

VDI SAFETY > Vmax | Flex Rod

STANDARDS PED

ORDER	S		L1 ±0.25		L		F_0 Initial Force		F_1 (ISOTHERMAL) End Force		Vol.			
	mm	inch	mm	inch	mm	inch	daN	lb	daN	lb	cm³	in³	Kg.	lb
ROT 3000 025	25	0.98	210	8.27	185	7.28	2945	6621	3481	7825	319	19.5	7.24	15.96
ROT 3000 038	38	1.50	236	9.29	198	7.80	±5% 150 bar 2175 psi at 20ºC 68ºF		3634	8170	394	24.0	7.58	16.71
ROT 3000 050	50	1.97	260	10.24	210	8.27			3739	8406	462	28.2	7.89	17.39
ROT 3000 063	63.5	2.50	287	11.30	223.5	8.80			3830	8610	540	32.9	8.24	18.17
ROT 3000 080	80	3.15	320	12.60	240	9.45			3914	8800	634	38.7	8.67	19.11
ROT 3000 100	100	3.94	360	14.17	260	10.24			3991	8973	749	45.7	9.19	20.26
ROT 3000 125	125	4.92	410	16.14	285	11.22			4062	9133	892	54.5	9.84	21.69
ROT 3000 160	160	6.30	480	18.90	320	12.60			4306	9680	994	60.7	10.75	23.70

TECHNICAL DATA

Fluid	N_2	Pmin Pmax 20ºC / 68ºF	20 bar 290 psi	150 bar 2175 psi	Charging Adapter	18 CG 1-Q	
Smax	< 90%	Tmin Tmax	0 ºC 32 ºF	80 ºC 176 ºF	Connection	ROT-H 3000 XXX	
Vmax	1,6 m/s	Force variation by temperature	±0,3% / ºC		Cartridge Kit	S ≤ 125mm	5080U460A
						S ≥ 160mm	5080U710A

© Azolgas 2022

ROB 5000

Special Applications

AZOL GAS

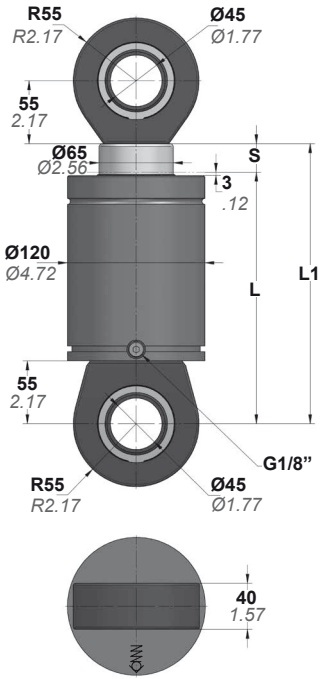

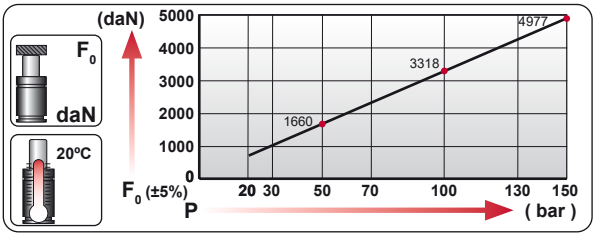

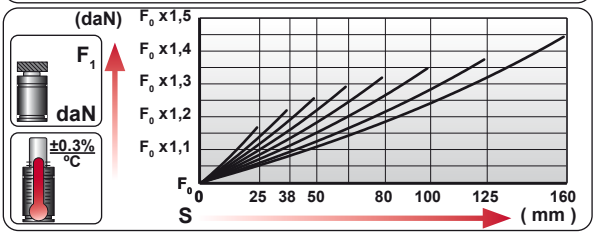

VDI SAFETY > Vmax | Flex Rod

STANDARDS PED

ORDER	S		L1 ±0.25		L		F_0 Initial Force		F_1 (ISOTHERMAL) End Force		Vol.			
	mm	inch	mm	inch	mm	inch	daN	lb	daN	lb	cm³	in³	Kg.	lb
ROB 5000 025	25	0.98	245	9.65	220	8.66	4980	11195	5911	13289	527	32.1	14.89	32.83
ROB 5000 038	38	1.50	271	10.67	233	9.17	±5% 150 bar 2175 psi at 20ºC 68ºF		6180	13893	649	39.6	15.42	33.99
ROB 5000 050	50	1.97	295	11.61	245	9.65			6365	14308	763	46.5	15.91	35.08
ROB 5000 063	63.5	2.50	322	12.68	258.5	10.18			6524	14667	890	54.3	16.45	36.27
ROB 5000 080	80	3.15	355	13.98	275	10.83			6674	15003	1046	63.8	17.13	37.76
ROB 5000 100	100	3.94	395	15.55	295	11.61			6810	15309	1235	75.4	17.94	39.55
ROB 5000 125	125	4.92	445	17.52	320	12.60			6936	15592	1471	89.8	18.96	41.80
ROB 5000 160	160	6.30	515	20.28	355	13.98			7226	16246	1708	104.2	20.38	44.93

TECHNICAL DATA

Fluid	N_2	Pmin Pmax 20ºC / 68ºF	20 bar 290 psi / 150 bar 2175 psi	Charging Adapter	18 CG 1-Q
Smax	< 90%	Tmin Tmax	0 ºC 32 ºF / 80 ºC 176 ºF	Connection	ROB-H 5000 XXX
Vmax	1,6 m/s	Force variation by temperature	±0,3% / ºC	Cartridge Kit	S ≤ 125mm 65A0W560A S ≥ 160mm 65A0W750A

© Azolgas 2022

AZOL GAS

ROT 5000

Special Applications

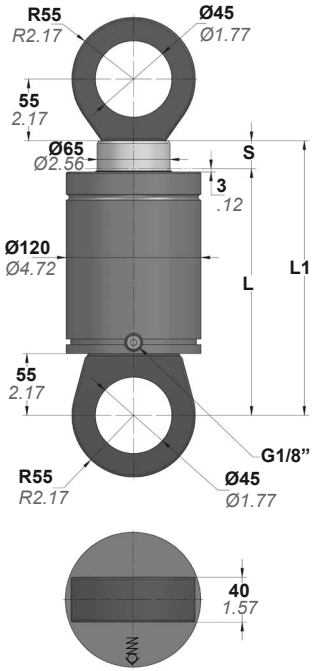

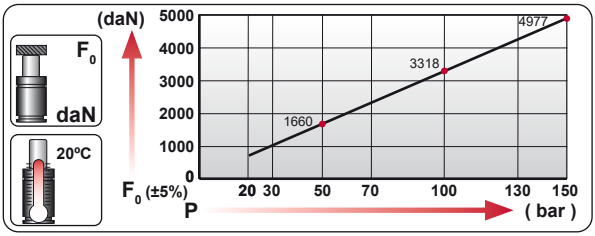

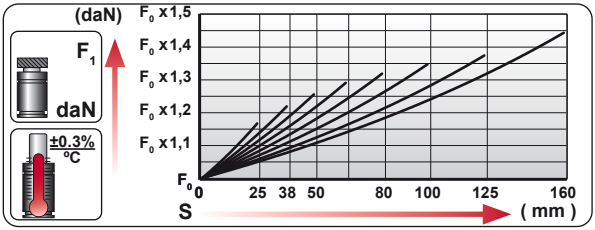

VDI SAFETY > Vmax | Flex Rod

STANDARDS PED

ORDER	S		L1 ±0.25		L		F_0 Initial Force		F_1 (ISOTHERMAL) End Force		Vol.			
	mm	inch	mm	inch	mm	inch	daN	lb	daN	lb	cm³	in³	Kg.	lb
ROT 5000 025	25	0.98	245	9.65	220	8.66	4980	11195	5911	13289	527	32.1	15.33	33.80
ROT 5000 038	38	1.50	271	10.67	233	9.17	±5% 150 bar 2175 psi at 20ºC 68ºF		6180	13893	649	39.6	15.86	34.96
ROT 5000 050	50	1.97	295	11.61	245	9.65			6365	14308	763	46.5	16.35	36.05
ROT 5000 063	63.5	2.50	322	12.68	258.5	10.18			6524	14667	890	54.3	16.90	37.26
ROT 5000 080	80	3.15	355	13.98	275	10.83			6674	15003	1046	63.8	17.57	38.73
ROT 5000 100	100	3.94	395	15.55	295	11.61			6810	15309	1235	75.4	18.38	40.52
ROT 5000 125	125	4.92	445	17.52	320	12.60			6936	15592	1471	89.8	19.40	42.77
ROT 5000 160	160	6.30	515	20.28	355	13.98			7226	16246	1708	104.2	20.83	45.92

TECHNICAL DATA

Fluid	N_2	Pmin Pmax 20ºC / 68ºF	20 bar 290 psi	150 bar 2175 psi	Charging Adapter	18 CG 1-Q	
Smax	< 90%	Tmin Tmax	0 ºC 32 ºF	80 ºC 176 ºF	Connection	ROT-H 5000 XXX	
Vmax	1,6 m/s	Force variation by temperature	±0,3% / ºC		Cartridge Kit	S ≤ 125mm	65A0W560A
						S ≥ 160mm	65A0W750A

© Azolgas 2022

VH 500

Special Applications

AZOL GAS

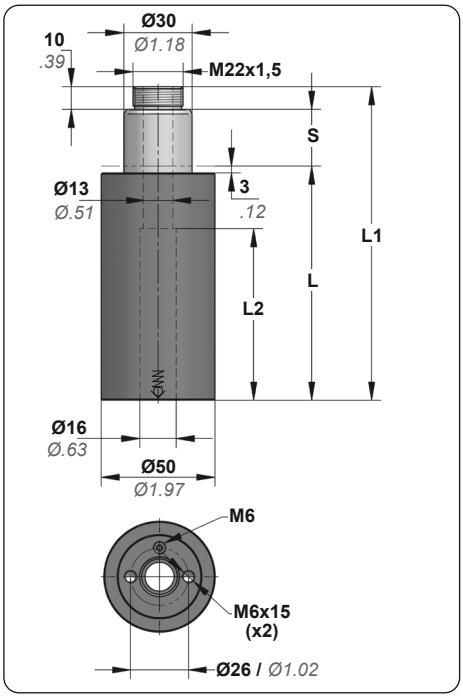

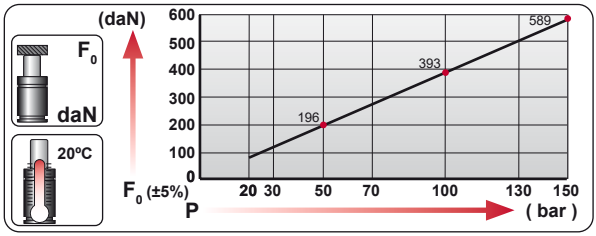

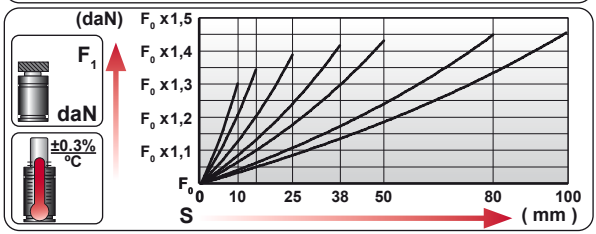

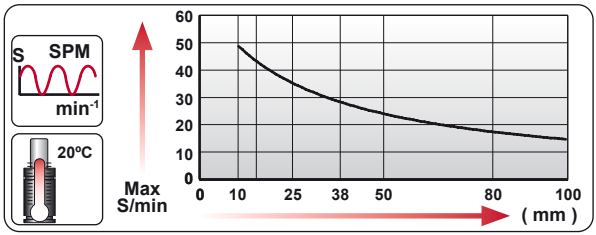

VDI SAFETY

STANDARDS PED

ORDER	S		L1 ±0.25		L		L2		F_0 Initial Force		F_1 (ISOTHERMAL) End Force			
	mm	inch	mm	inch	mm	inch	mm	inch	daN	lb	daN	lb	Kg.	lb
VH 500 010	10	0.39	108	4.25	88	3.46	45.5	1.79	510	1147	901	2026	0.98	2.16
VH 500 015	15	0.59	118	4.65	93	3.66	55.5	2.19	±5% 130 bar 1885 psi at 20ºC 68ºF		972	2184	1.01	2.23
VH 500 025	25	0.98	138	5.43	103	4.06	75.5	2.97			1049	2359	1.09	2.40
VH 500 038	38	1.50	164	6.46	116	4.57	85.5	3.37			1100	2474	1.18	2.60
VH 500 050	50	1.97	188	7.40	128	5.04	97.5	3.84			1127	2534	1.27	2.80
VH 500 080	80	3.15	248	9.76	158	6.22	127.5	5.02			1163	2614	1.50	3.31
VH 500 100	100	3.94	288	11.34	178	7.01	147.5	5.81			1175	2643	1.65	3.64

MOUNTING OPTIONS

HOW TO ORDER

Base Mount — B31-050 607

Rod Mount — E33-050 606

TECHNICAL DATA

Fluid	N_2	Pmin Pmax 20ºC / 68ºF	20 bar 290 psi / 150 bar 2175 psi	Charging Adapter	06 CG 2-Q
Smax	< 90%	Tmin Tmax	0 ºC 32 ºF / 80 ºC 176 ºF	Connection	X
Vmax	0,5 m/s	Force variation by temperature	±0,3% / ºC	Cartridge Kit	3044D250A

© Azolgas 2022

AZOL GAS

VH 1200

Special Applications

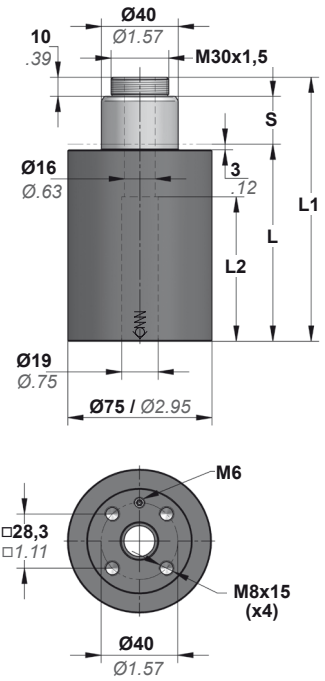

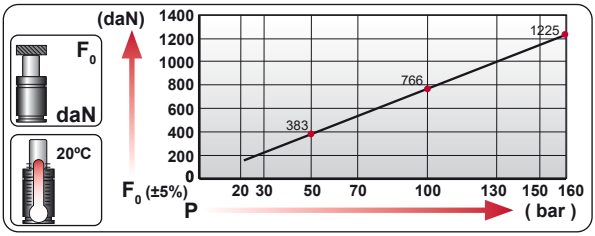

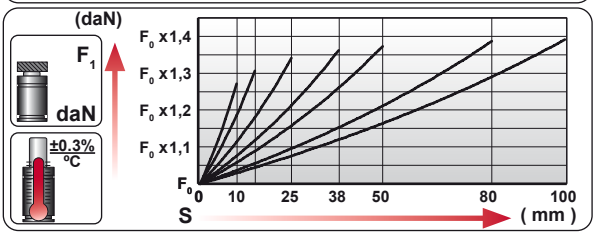

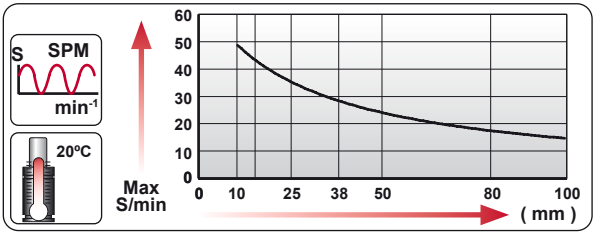

VDI SAFETY

STANDARDS PED

ORDER	S		L1 ±0.25		L		L2		F_0 Initial Force		F_1 (ISOTHERMAL) End Force			
	mm	inch	mm	inch	mm	inch	mm	inch	daN	lb	daN	lb	Kg.	lb
VH 1200 010	10	0.39	108	4.25	88	3.46	45.5	1.79	1225	2754	1898	4266	2.37	5.22
VH 1200 015	15	0.59	118	4.65	93	3.66	55.5	2.19	±5% 160 bar 2320 psi at 20ºC 68ºF		2001	4499	2.45	5.40
VH 1200 025	25	0.98	138	5.43	103	4.06	75.5	2.97			2111	4746	2.63	5.80
VH 1200 038	38	1.50	164	6.46	116	4.57	85.5	3.37			2180	4901	2.86	6.31
VH 1200 050	50	1.97	188	7.40	128	5.04	97.5	3.84			2216	4981	3.08	6.79
VH 1200 080	80	3.15	248	9.76	158	6.22	127.5	5.02			2262	5085	3.61	7.96
VH 1200 100	100	3.94	288	11.34	178	7.01	147.5	5.81			2278	5122	3.97	8.75

MOUNTING OPTIONS

HOW TO ORDER

Base Mount — B31-075 607

Rod Mount — E33-075 606

TECHNICAL DATA

Fluid	N_2	Pmin Pmax 20ºC / 68ºF	20 bar 160 bar 290 psi 2320 psi	Charging Adapter	06 CG 2-Q
Smax	< 90%	Tmin Tmax	0 ºC 80 ºC 32 ºF 176 ºF	Connection	X
Vmax	0,5 m/s	Force variation by temperature	±0,3% / ºC	Cartridge Kit	40633250A

© Azolgas 2022

VH 2200

Special Applications

AZOL GAS

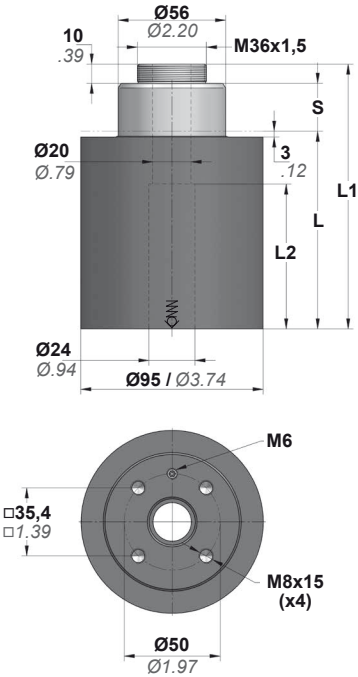

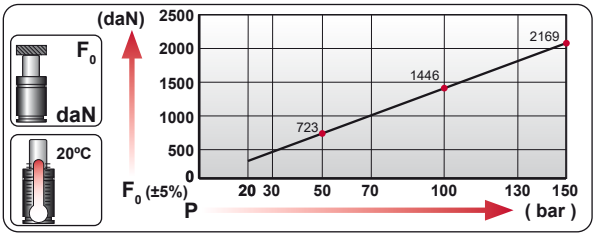

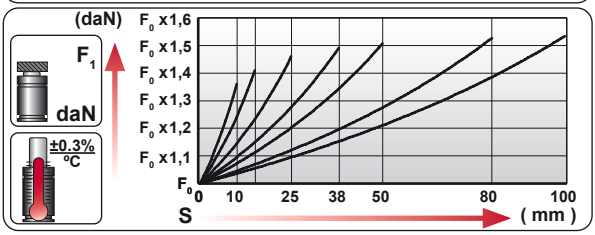

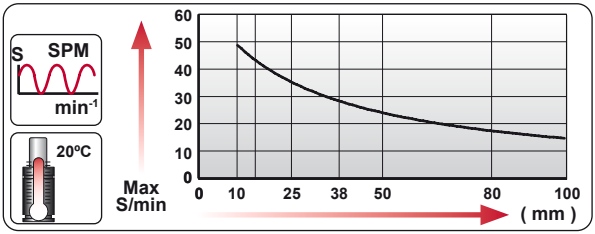

VDI SAFETY

STANDARDS PED

ORDER	S		L1 ±0.25		L		L2		F_0 Initial Force		F_1 (ISOTHERMAL) End Force			
	mm	inch	mm	inch	mm	inch	mm	inch	daN	lb	daN	lb	Kg.	lb
VH 2200 010	10	0.39	108	4.25	88	3.46	45.5	1.79	2168	4874	3979	8945	3.88	8.55
VH 2200 015	15	0.59	118	4.65	93	3.66	55.5	2.19	±5% 150 bar 2175 psi at 20ºC 68ºF		4320	9712	4.04	8.91
VH 2200 025	25	0.98	138	5.43	103	4.06	75.5	2.97			4702	10572	4.36	9.61
VH 2200 038	38	1.50	164	6.46	116	4.57	85.5	3.37			4957	11143	4.77	10.52
VH 2200 050	50	1.97	188	7.40	128	5.04	97.5	3.84			5092	11447	5.16	11.38
VH 2200 080	80	3.15	248	9.76	158	6.22	127.5	5.02			5271	11849	6.12	13.49
VH 2200 100	100	3.94	288	11.34	178	7.01	147.5	5.81			5335	11994	6.76	14.90

MOUNTING OPTIONS

HOW TO ORDER

Base Mount — B31-095 607

Rod Mount — E33-095 606

TECHNICAL DATA

Fluid	N_2	Pmin Pmax 20ºC / 68ºF	20 bar 290 psi / 150 bar 2175 psi	Charging Adapter	06 CG 2-Q
Smax	< 90%	Tmin Tmax	0 ºC 32 ºF / 80 ºC 176 ºF	Connection	X
Vmax	0,5 m/s	Force variation by temperature	±0,3% / ºC	Cartridge Kit	56803250A

© Azolgas 2022

AZOL GAS

© Azolgas 2022

ART 180

Special Applications

AZOL GAS

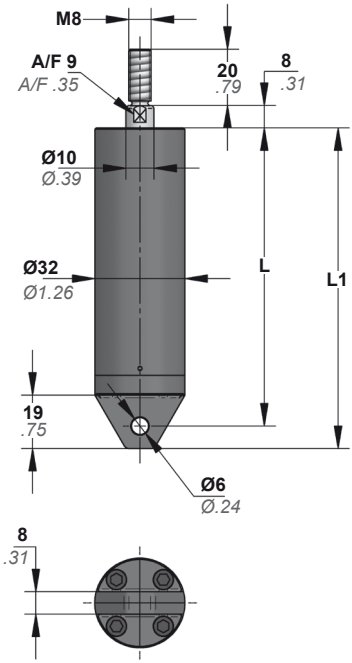

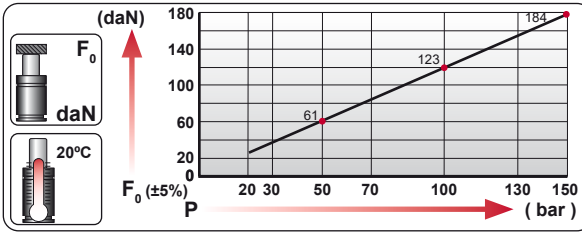

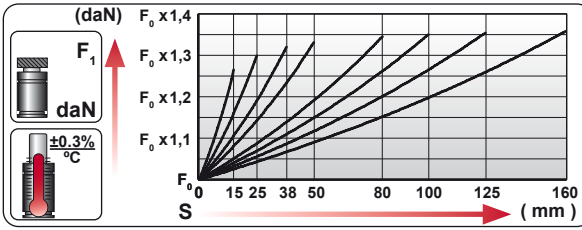

VDI SAFETY

STANDARDS PED

ORDER	S		L1 ±0.25		L		F_0 Initial Force		F_1 (ISOTHERMAL) End Force		Vol.			
	mm	inch	mm	inch	mm	inch	daN	lb	daN	lb	cm³	in³	Kg.	lb
ART 180 015	15	0.59	114	4.49	106	4.17	180	405	286	643	8	0.5	0.52	1.15
ART 180 025	25	0.98	134	5.28	126	4.96	±5% 150 bar 2175 psi at 20ºC 68ºF		254	572	17	1.0	0.59	1.30
ART 180 038	38	1.50	160	6.30	152	5.98			245	550	29	1.8	0.67	1.48
ART 180 050	50	1.97	184	7.24	176	6.93			241	541	40	2.4	0.74	1.63
ART 180 080	80	3.15	244	9.61	236	9.29			237	533	67	4.1	0.93	2.05
ART 180 100	100	3.94	284	11.18	276	10.87			236	530	85	5.2	1.06	2.34
ART 180 125	125	4.92	334	13.15	326	12.83			235	528	108	6.6	1.21	2.67
ART 180 160	160	6.30	404	15.91	396	15.59			234	526	139	8.5	1.43	3.15

TECHNICAL DATA

Fluid	N_2	Pmin Pmax 20ºC / 68ºF	20 bar 150 bar 290 psi 2175 psi	Charging Adapter	18 CG 1-Q
Smax	< 90%	Tmin Tmax	0 ºC 80 ºC 32 ºF 176 ºF	Connection	X
Vmax	0,5 m/s	Force variation by temperature	±0,3% / ºC	Cartridge Kit	1026B265P

© Azolgas 2022

AZOL GAS

ART 300

Special Applications

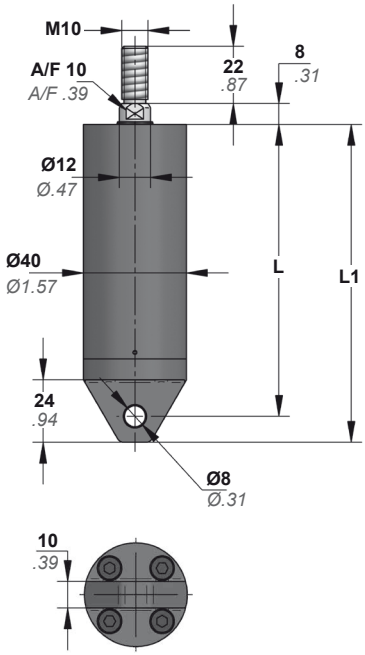

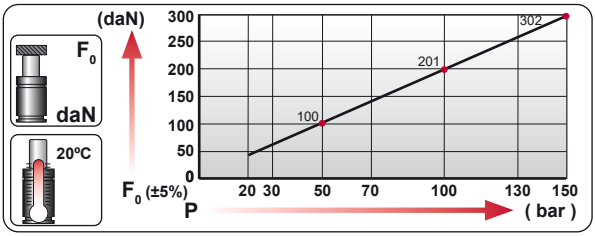

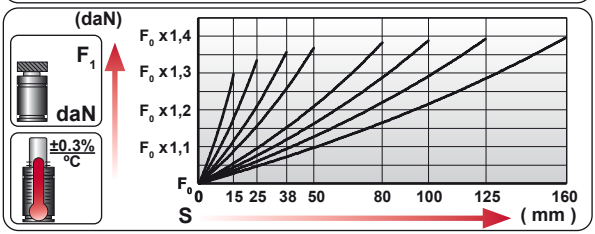

VDI SAFETY

STANDARDS PED

ORDER	S		L1 ±0.25		L		F_0 Initial Force		F_1 (ISOTHERMAL) End Force		Vol.			
	mm	inch	mm	inch	mm	inch	daN	lb	daN	lb	cm³	in³	Kg.	lb
ART 300 015	15	0.59	122	4.80	112	4.41	300	674	347	781	12	0.8	0.83	1.83
ART 300 025	25	0.98	142	5.59	132	5.20	±5% 150 bar 2175 psi at 20ºC 68ºF		336	756	26	1.6	0.93	2.05
ART 300 038	38	1.50	168	6.61	158	6.22			332	747	44	2.7	1.05	2.31
ART 300 050	50	1.97	192	7.56	182	7.17			331	744	61	3.7	1.17	2.58
ART 300 080	80	3.15	252	9.92	242	9.53			329	740	102	6.2	1.46	3.22
ART 300 100	100	3.94	292	11.50	282	11.10			329	739	130	7.9	1.65	3.64
ART 300 125	125	4.92	342	13.46	332	13.07			328	738	164	10.0	1.89	4.17
ART 300 160	160	6.30	412	16.22	402	15.83			328	737	213	13.0	2.23	4.92

TECHNICAL DATA

Fluid	N_2	Pmin Pmax 20ºC / 68ºF	20 bar 290 psi	150 bar 2175 psi	Charging Adapter	18 CG 1-Q
Smax	< 90%	Tmin Tmax	0 ºC 32 ºF	80 ºC 176 ºF	Connection	X
Vmax	0,5 m/s	Force variation by temperature	±0,3% / ºC		Cartridge Kit	1232E270P

© Azolgas 2022

ART 500

Special Applications

AZOL GAS

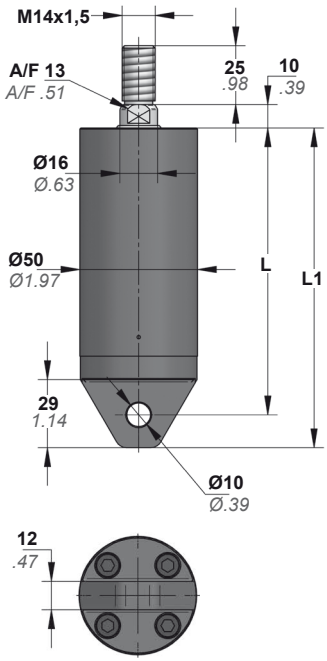

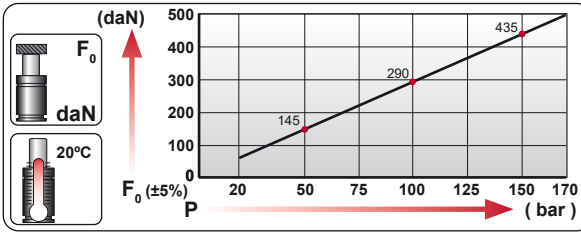

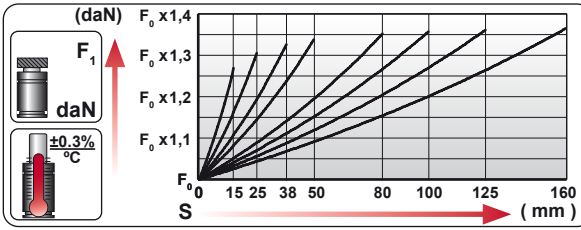

VDI SAFETY

STANDARDS PED

ORDER	S		L1 ±0.25		L		F_0 Initial Force		F_1 (ISOTHERMAL) End Force		Vol.			
	mm	inch	mm	inch	mm	inch	daN	lb	daN	lb	cm³	in³	Kg.	lb
ART 500 015	15	0.59	136	5.35	122	4.80	500	1124	594	1336	19	1.2	1.50	3.31
ART 500 025	25	0.98	156	6.14	142	5.59	±5% 170 bar 2465 psi at 20ºC 68ºF		572	1285	40	2.4	1.64	3.62
ART 500 038	38	1.50	182	7.17	168	6.61			564	1267	68	4.1	1.82	4.01
ART 500 050	50	1.97	206	8.11	192	7.56			561	1260	93	5.7	1.99	4.39
ART 500 080	80	3.15	266	10.47	252	9.92			557	1253	156	9.5	2.41	5.31
ART 500 100	100	3.94	306	12.05	292	11.50			556	1251	198	12.1	2.69	5.93
ART 500 125	125	4.92	356	14.02	342	13.46			556	1249	251	15.3	3.05	6.72
ART 500 160	160	6.30	426	16.77	412	16.22			555	1247	325	19.8	3.54	7.80

TECHNICAL DATA

Fluid	N_2	Pmin Pmax 20ºC / 68ºF	20 bar 290 psi	170 bar 2465 psi	Charging Adapter	18 CG 1-Q
Smax	< 90%	Tmin Tmax	0 ºC 32 ºF	80 ºC 176 ºF	Connection	X
Vmax	0,5 m/s	Force variation by temperature	±0,3% / ºC		Cartridge Kit	1640N230P

© Azolgas 2022

AZOL GAS

ART 750

Special Applications

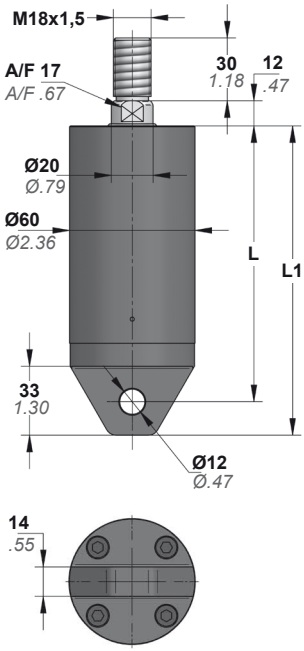

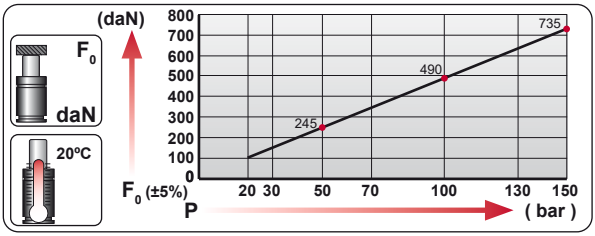

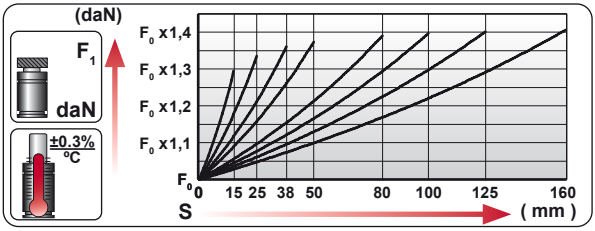

VDI SAFETY

STANDARDS PED

ORDER	S		L1 ±0.25		L		F_0 Initial Force		F_1 (ISOTHERMAL) End Force		Vol.			
	mm	inch	mm	inch	mm	inch	daN	lb	daN	lb	cm³	in³	Kg.	lb
ART 750 015	15	0.59	148	5.83	132	5.20	735	1652	874	1964	30	1.8	2.32	5.11
ART 750 025	25	0.98	168	6.61	152	5.98	±5% 150 bar 2175 psi at 20ºC 68ºF		840	1889	63	3.8	2.52	5.56
ART 750 038	38	1.50	194	7.64	178	7.01			829	1863	106	6.4	2.77	6.11
ART 750 050	50	1.97	218	8.58	202	7.95			824	1853	145	8.9	3.00	6.61
ART 750 080	80	3.15	278	10.94	262	10.31			819	1842	244	14.9	3.59	7.91
ART 750 100	100	3.94	318	12.52	302	11.89			818	1839	310	18.9	3.98	8.77
ART 750 125	125	4.92	368	14.49	352	13.86			817	1836	393	24.0	4.47	9.85
ART 750 160	160	6.30	438	17.24	422	16.61			816	1834	508	31.0	5.16	11.38

TECHNICAL DATA

Fluid	N_2	Pmin Pmax 20ºC / 68ºF	20 bar 150 bar 290 psi 2175 psi		Charging Adapter	18 CG 1-Q
Smax	< 90%	Tmin Tmax	0 ºC 80 ºC 32 ºF 176 ºF		Connection	X
Vmax	0,5 m/s	Force variation by temperature	±0,3% / ºC		Cartridge Kit	2050N240P

© Azolgas 2022

ART 1200

Special Applications

AZOL GAS

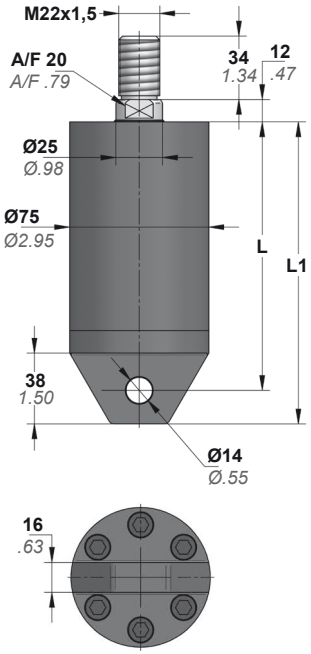

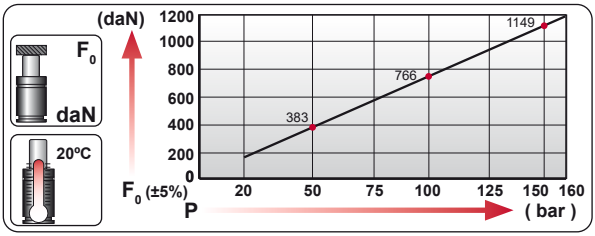

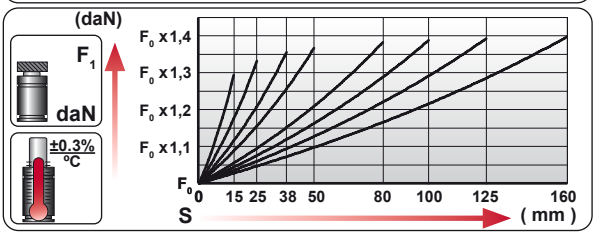

VDI SAFETY

STANDARDS PED

ORDER	S		L1 ±0.25		L		F_0 Initial Force		F_1 (ISOTHERMAL) End Force		Vol.			
	mm	inch	mm	inch	mm	inch	daN	lb	daN	lb	cm³	in³	Kg.	lb
ART 1200 015	15	0.59	162	6.38	144	5.67	1200	2698	1421	3195	47	2.9	4.01	8.84
ART 1200 025	25	0.98	182	7.17	164	6.46	±5% 160 bar 2320 psi at 20ºC 68ºF		1368	3076	100	6.1	4.33	9.55
ART 1200 038	38	1.50	208	8.19	190	7.48			1350	3034	168	10.3	4.74	10.45
ART 1200 050	50	1.97	232	9.13	214	8.43			1343	3018	231	14.1	5.12	11.29
ART 1200 080	80	3.15	292	11.50	274	10.79			1335	3001	389	23.7	6.06	13.36
ART 1200 100	100	3.94	332	13.07	314	12.36			1332	2996	494	30.1	6.69	14.75
ART 1200 125	125	4.92	382	15.04	364	14.33			1331	2991	625	38.1	7.48	16.49
ART 1200 160	160	6.30	452	17.80	434	17.09			1329	2988	809	49.4	8.58	18.92

TECHNICAL DATA

Fluid	N_2	Pmin Pmax 20ºC / 68ºF	20 bar 290 psi / 160 bar 2320 psi	Charging Adapter	18 CG 1-Q
Smax	< 90%	Tmin Tmax	0 ºC 32 ºF / 80 ºC 176 ºF	Connection	X
Vmax	0,5 m/s	Force variation by temperature	±0,3% / ºC	Cartridge Kit	25638320P

© Azolgas 2022

AZOL GAS

ART 1500

Special Applications

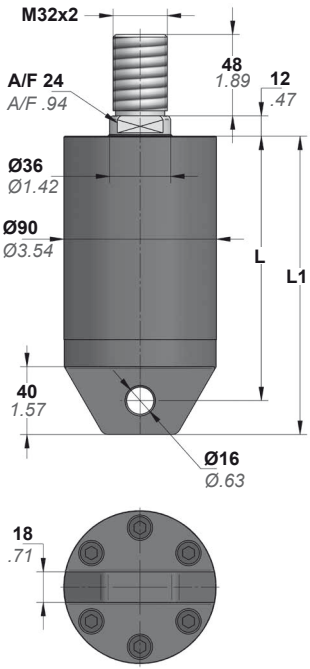

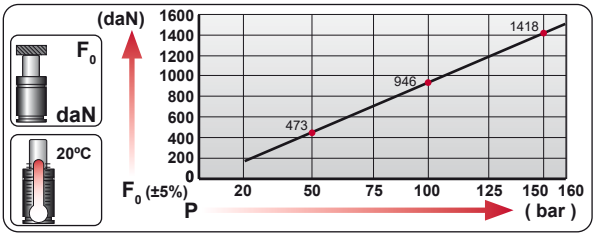

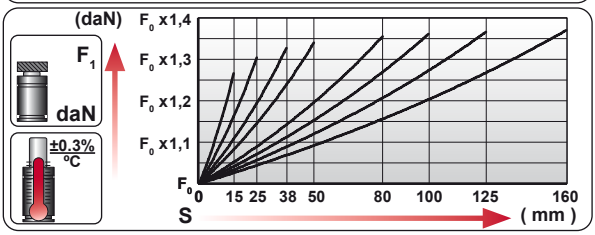

VDI SAFETY

STANDARDS PED APPROVED 2014/68/EU

ORDER	S		L1 ±0.25		L		F_0 Initial Force		F_1 (ISOTHERMAL) End Force		Vol.			
	mm	inch	mm	inch	mm	inch	daN	lb	daN	lb	cm³	in³	Kg.	lb
ART 1500 015	15	0.59	176	6.93	156	6.14	1500	3372	1999	4493	61	3.7	6.56	14.46
ART 1500 025	25	0.98	196	7.72	176	6.93	±5% 160 bar 2320 psi at 20ºC 68ºF		1868	4199	129	7.9	7.02	15.48
ART 1500 038	38	1.50	222	8.74	202	7.95			1824	4101	218	13.3	7.63	16.82
ART 1500 050	50	1.97	246	9.69	226	8.90			1807	4063	299	18.3	8.19	18.06
ART 1500 080	80	3.15	306	12.05	286	11.26			1790	4023	503	30.7	9.58	21.12
ART 1500 100	100	3.94	346	13.62	326	12.83			1784	4011	639	39.0	10.51	23.17
ART 1500 125	125	4.92	396	15.59	376	14.80			1780	4001	809	49.4	11.68	25.75
ART 1500 160	160	6.30	466	18.35	446	17.56			1776	3993	1047	63.9	13.30	29.32

TECHNICAL DATA

Fluid	N_2	Pmin Pmax 20ºC / 68ºF	20 bar 290 psi	160 bar 2320 psi	Charging Adapter	18 CG 1-Q
Smax	< 90%	Tmin Tmax	0 ºC 32 ºF	80 ºC 176 ºF	Connection	X
Vmax	0,5 m/s	Force variation by temperature	±0,3% / ºC		Cartridge Kit	36758290P

© Azolgas 2022